Cambridge Assessment International Education

Cambridge International AS & A Level

CANDIDATE NAME

CENTRE NUMBER

CANDIDATE NUMBER

1653381209

PHYSICS **9702/21**

Paper 2 AS Level Structured Questions **October/November 2022**

1 hour 15 minutes

You must answer on the question paper.

No additional materials are needed.

INSTRUCTIONS

- Answer **all** questions.
- Use a black or dark blue pen. You may use an HB pencil for any diagrams or graphs.
- Write your name, centre number and candidate number in the boxes at the top of the page.
- Write your answer to each question in the space provided.
- Do **not** use an erasable pen or correction fluid.
- Do **not** write on any bar codes.
- You may use a calculator.
- You should show all your working and use appropriate units.

INFORMATION

- The total mark for this paper is 60.
- The number of marks for each question or part question is shown in brackets [ ].

This document has **20** pages. Any blank pages are indicated.

DC (KS/JG) 303283/4
© UCLES 2022

Data

acceleration of free fall	g	=	$9.81\ \text{m s}^{-2}$
speed of light in free space	c	=	$3.00 \times 10^{8}\ \text{m s}^{-1}$
elementary charge	e	=	$1.60 \times 10^{-19}\ \text{C}$
unified atomic mass unit	1 u	=	$1.66 \times 10^{-27}\ \text{kg}$
rest mass of proton	m_p	=	$1.67 \times 10^{-27}\ \text{kg}$
rest mass of electron	m_e	=	$9.11 \times 10^{-31}\ \text{kg}$
Avogadro constant	N_A	=	$6.02 \times 10^{23}\ \text{mol}^{-1}$
molar gas constant	R	=	$8.31\ \text{J K}^{-1}\ \text{mol}^{-1}$
Boltzmann constant	k	=	$1.38 \times 10^{-23}\ \text{J K}^{-1}$
gravitational constant	G	=	$6.67 \times 10^{-11}\ \text{N m}^2\ \text{kg}^{-2}$
permittivity of free space	ε_0	=	$8.85 \times 10^{-12}\ \text{F m}^{-1}$
	$\left(\frac{1}{4\pi\varepsilon_0}\right.$	=	$\left.8.99 \times 10^{9}\ \text{m F}^{-1}\right)$
Planck constant	h	=	$6.63 \times 10^{-34}\ \text{J s}$
Stefan–Boltzmann constant	σ	=	$5.67 \times 10^{-8}\ \text{W m}^{-2}\ \text{K}^{-4}$

Formulae

uniformly accelerated motion	s	=	$ut + \frac{1}{2}at^2$
	v^2	=	$u^2 + 2as$
hydrostatic pressure	Δp	=	$\rho g \Delta h$
upthrust	F	=	$\rho g V$
Doppler effect for sound waves	f_o	=	$\frac{f_\text{s} v}{v \pm v_\text{s}}$
electric current	I	=	$Anvq$
resistors in series	R	=	$R_1 + R_2 + \ldots$
resistors in parallel	$\frac{1}{R}$	=	$\frac{1}{R_1} + \frac{1}{R_2} + \ldots$

© UCLES 2022

BLANK PAGE

1 **(a)** The boxes in Fig. 1.1 contain terms on the left-hand side and examples of these terms on the right-hand side.

Draw a line between each term on the left and the correct example on the right.

base quantity	coulomb
base unit	electric current
derived quantity	force
derived unit	kilogram

Fig. 1.1

[2]

(b) A set of experimental measurements is described as precise and not accurate.

State what is meant by:

(i) precise

.....

..... [1]

(ii) not accurate.

.....

..... [1]

© UCLES 2022

(c) An object of mass m travels with speed v in a circle of radius r. The force F acting on the object is given by

$$F = \frac{mv^2}{r}.$$

The percentage uncertainties of three of the quantities are given in Table 1.1.

Table 1.1

quantity	percentage uncertainty
F	±3%
m	±4%
r	±5%

The value of v is determined from F, m and r.

(i) Calculate the percentage uncertainty in v.

percentage uncertainty = ... % [2]

(ii) The value of v is $15.0\,\text{m s}^{-1}$.

Calculate the absolute uncertainty in v.

absolute uncertainty = ... m s^{-1} [1]

[Total: 7]

2 A steel ball is projected horizontally from the top of a table, as shown in Fig. 2.1.

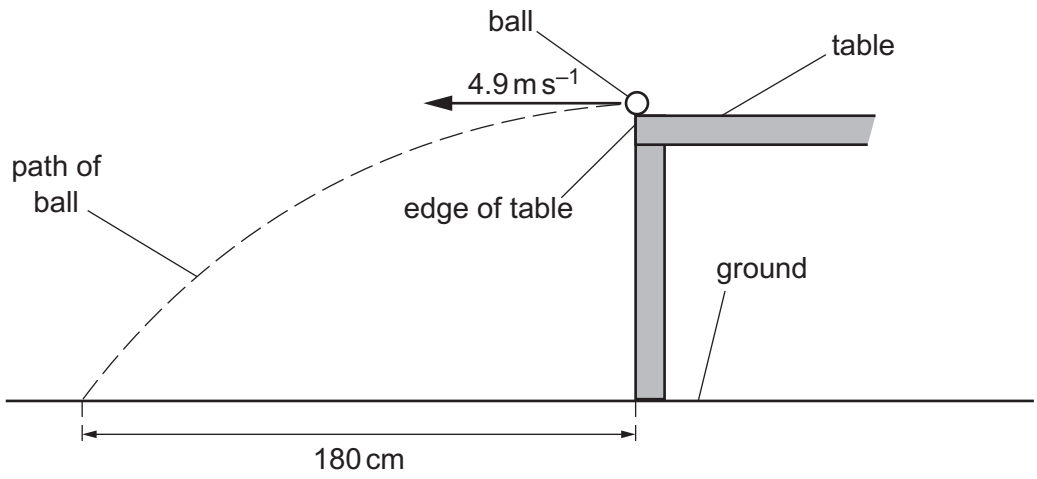

Fig. 2.1 (not to scale)

The ball is projected horizontally at a speed of 4.9 m s^{-1}. The ball lands on the ground a horizontal distance of 180 cm from the edge of the table.

Assume that air resistance is negligible.

(a) (i) Calculate the time taken for the ball to reach the ground.

time = ... s [1]

(ii) Calculate the vertical component of the velocity of the ball as it hits the ground.

velocity = ... m s^{-1} [2]

© UCLES 2022

(iii) Determine the magnitude and the angle to the horizontal of the velocity of the ball as it hits the ground.

magnitude of velocity = ... $m\,s^{-1}$

angle to the horizontal = ... °

[3]

(b) The ball is projected by means of a compressed spring which is attached to a fixed block as shown in Fig. 2.2.

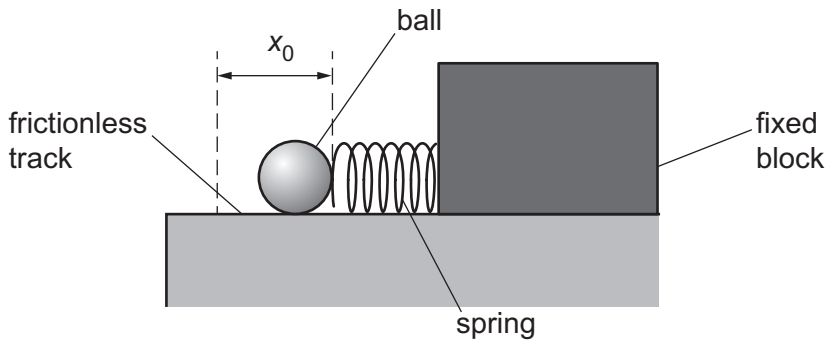

Fig. 2.2

The ball is placed on a frictionless track in front of the spring. The ball is then pulled back so that the spring has compression x_0.

When the spring is released, the ball is projected horizontally as shown in Fig. 2.3.

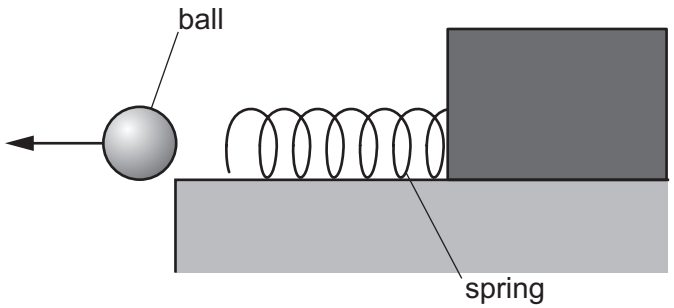

Fig. 2.3

The variation with compression x of the applied force F for the spring is shown in Fig. 2.4.

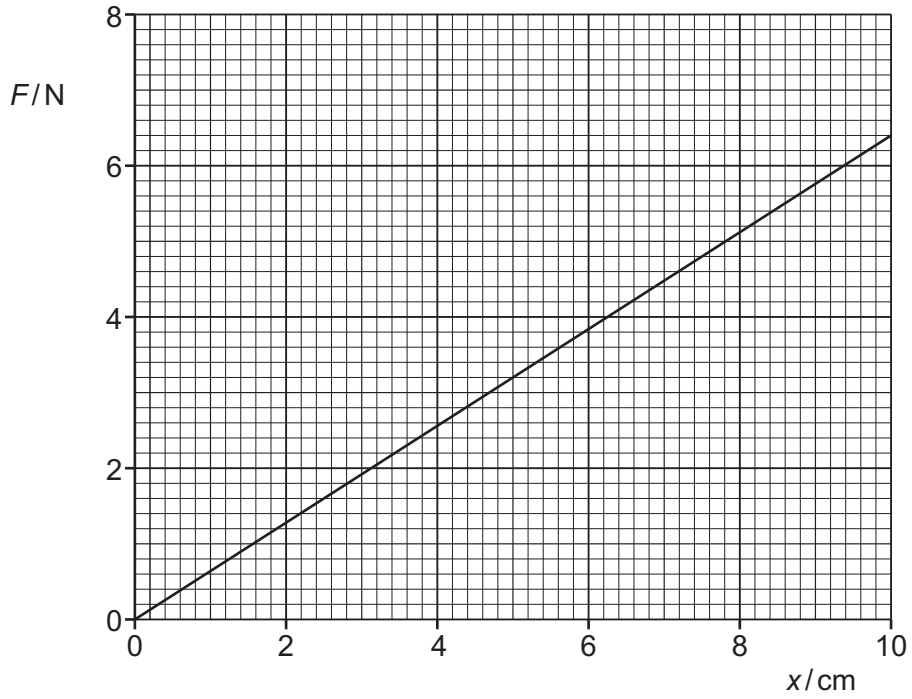

Fig. 2.4

The ball is a uniform sphere of steel of diameter 0.016 m and mass 0.017 kg.

(i) Calculate the density of the steel.

density = ... $kg\,m^{-3}$ [3]

(ii) All of the elastic potential energy in the spring is converted into kinetic energy of the ball. The speed of the ball as it leaves the spring is $4.9\,m\,s^{-1}$.

Show that the maximum elastic potential energy of the spring is 0.20 J.

[2]

© UCLES 2022

(iii) Use Fig. 2.4 to determine the spring constant k of the spring.

k = ... $N\,m^{-1}$ [2]

(iv) Use your answer in **(b)(iii)** and the value of energy given in **(b)(ii)** to determine the compression x_0 of the spring.

x_0 = ... m [2]

(c) The steel ball is replaced by a polystyrene ball of the same diameter but of much lower mass. The spring is given compression x_0 and is then released.

Air resistance on this ball is **not** negligible after it leaves the spring.

Explain:

(i) why this ball leaves the spring with a greater speed than that of the steel ball

.....

.....

..... [1]

(ii) why this ball takes a longer time to reach the ground than the steel ball.

.....

.....

..... [1]

[Total: 17]

3 (a) (i) Define power.

.....

..... [1]

(ii) Mechanical power P can be calculated using the formula $P = Fv$.

Use the concept of work and the definition of power to show how this formula is derived.

[2]

(b) The engine of a lorry provides 130 kW of power to the lorry's wheels when it is travelling at a constant speed of 25 m s^{-1} along a straight horizontal road.

Show that the resistive force opposing the forward motion of the lorry is 5200 N.

[1]

© UCLES 2022

(c) The lorry in **(b)** travels up a straight section of road that is inclined at an angle θ to the horizontal, as shown in Fig. 3.1.

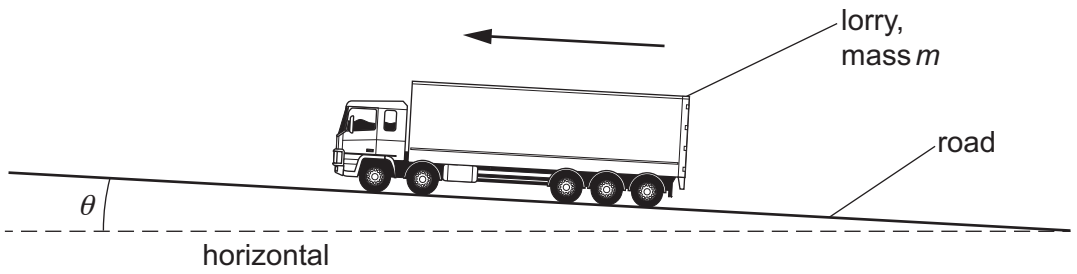

Fig. 3.1 (not to scale)

The lorry has mass m and the acceleration of free fall is g.

(i) Determine an expression, in terms of m, g and θ, for the component of the weight of the lorry that acts parallel to the surface of the road.

[1]

(ii) The total resistive force remains unchanged at 5200 N and the engine now provides greater power to maintain the speed of 25 m s^{-1}. The total mass m of the lorry is 36 000 kg. The angle θ is 1.4°.

Determine the power, in kW, now provided by the engine.

power = ... kW [3]

[Total: 8]

4 **(a)** Polarisation is a phenomenon associated with light waves but not with sound waves.

(i) State the meaning of polarisation.

.....

.....

..... [1]

(ii) State why light waves can be plane polarised but sound waves cannot.

.....

.....

..... [1]

(b) Two polarising filters A and B are positioned so that their planes are parallel to each other and perpendicular to a central axis line XY, as shown in Fig. 4.1.

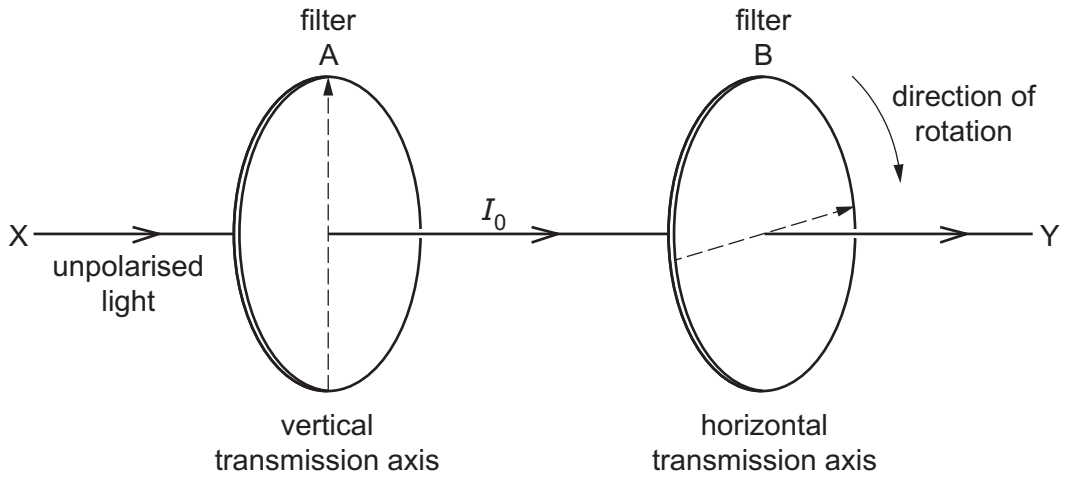

Fig. 4.1

The transmission axis of filter A is vertical and the transmission axis of filter B is horizontal.

Unpolarised light of a single frequency is directed along the line XY from a source positioned at X. The light emerging from filter A is vertically plane polarised and has intensity I_0.

Filter B is rotated from its starting position about the line XY, as shown in Fig. 4.1.

After rotation, the intensity of the light emerging from filter B is $\frac{1}{4} I_0$.

Calculate the angle of rotation of filter B from its starting position.

angle of rotation = ... ° [3]

(c) A microwave of intensity I_0 and amplitude A_0 meets another microwave of the same frequency and of intensity $\frac{1}{4} I_0$ travelling in the opposite direction. Both microwaves are vertically plane polarised and superpose where they meet.

(i) Explain, without calculation, why these two waves cannot form a stationary wave with zero amplitude at its nodes.

.....

.....

..... [2]

(ii) Determine, in terms of A_0, the maximum amplitude of the wave formed.

maximum amplitude = ... A_0 [3]

[Total: 10]

5 **(a)** State Ohm's law.

.....

.....

..... [2]

(b) The variation of current I with potential difference V for a filament lamp is shown in Fig. 5.1.

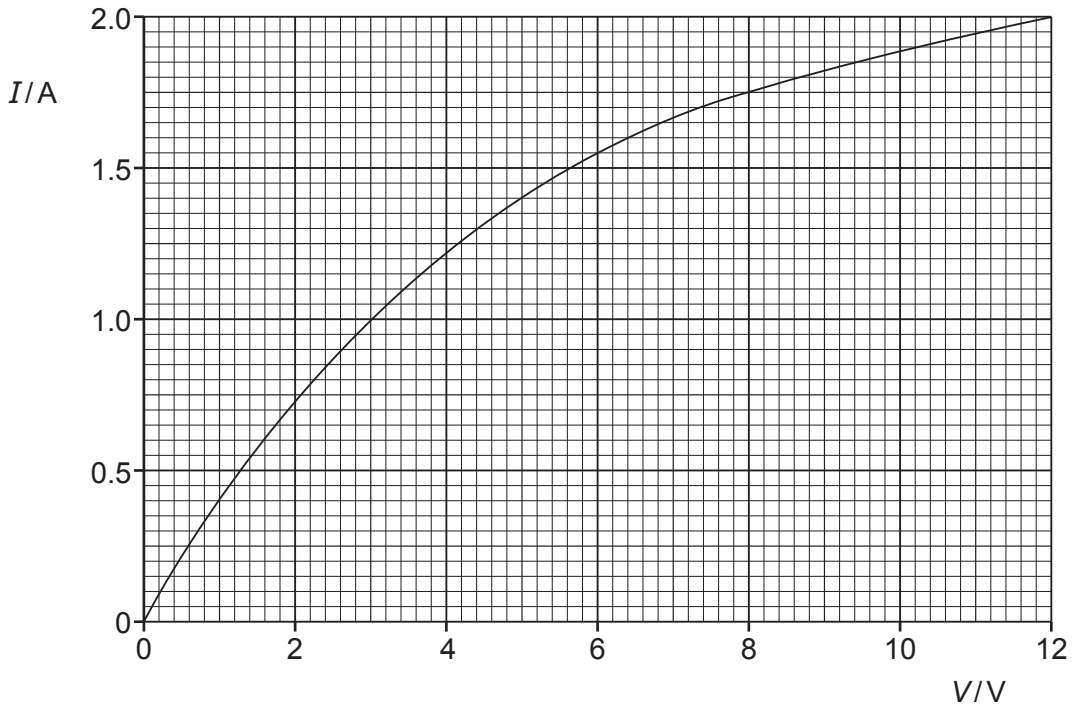

Fig. 5.1

The resistance of the filament lamp increases with potential difference.

(i) State how Fig. 5.1 shows this.

.....

..... [1]

(ii) Explain why the resistance varies in this way.

.....

..... [1]

© UCLES 2022

(c) Fig. 5.2 shows a circuit with a battery of electromotive force (e.m.f.) 12.0 V connected to a linear potentiometer AB and two identical filament lamps P and Q.

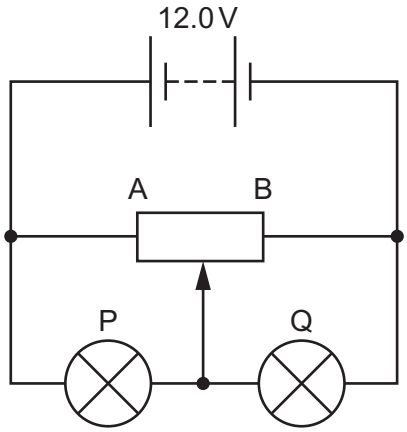

Fig. 5.2

The battery has negligible internal resistance and the lamps each have the same I–V characteristic shown in Fig. 5.1.

When the slider of the potentiometer is at its midpoint, as shown in Fig. 5.2, the current I in the battery is 1.78 A.

Determine:

(i) the current in lamp P

current = ... A [1]

(ii) the total power dissipated in lamps P and Q

total power = ... W [2]

(iii) the resistance of the potentiometer between its ends A and B.

resistance = ... Ω [2]

(d) The slider of the potentiometer in **(c)** is moved to end A.

State and explain the effect on the brightness of lamps P and Q.

lamp P: .....

.....

lamp Q: .....

.....

[2]

[Total: 11]

6 **(a)** A lepton is an example of a fundamental particle.

State what is meant by fundamental particle.

.....

..... [1]

(b) A lambda particle Λ^0 is a hadron that consists of an up (u) quark, a down (d) quark and a strange (s) quark.

Show that the charge on the Λ^0 particle is zero.

[2]

(c) The Λ^0 particle is unstable. It can decay into a neutron (n) and a pion (π^0) as shown by

$$\Lambda^0 \longrightarrow n + \pi^0.$$

The π^0 particle consists of an up quark and an up antiquark.

(i) Compare the properties of an up quark and an up antiquark.

.....

.....

..... [2]

(ii) Explain why the neutron is classed as a baryon and the π^0 particle is classed as a meson.

.....

.....

..... [2]

[Total: 7]

© UCLES 2022

BLANK PAGE

BLANK PAGE

BLANK PAGE

Permission to reproduce items where third-party owned material protected by copyright is included has been sought and cleared where possible. Every reasonable effort has been made by the publisher (UCLES) to trace copyright holders, but if any items requiring clearance have unwittingly been included, the publisher will be pleased to make amends at the earliest possible opportunity.

To avoid the issue of disclosure of answer-related information to candidates, all copyright acknowledgements are reproduced online in the Cambridge Assessment International Education Copyright Acknowledgements Booklet. This is produced for each series of examinations and is freely available to download at www.cambridgeinternational.org after the live examination series.

Cambridge Assessment International Education is part of Cambridge Assessment. Cambridge Assessment is the brand name of the University of Cambridge Local Examinations Syndicate (UCLES), which is a department of the University of Cambridge.

© UCLES 2022